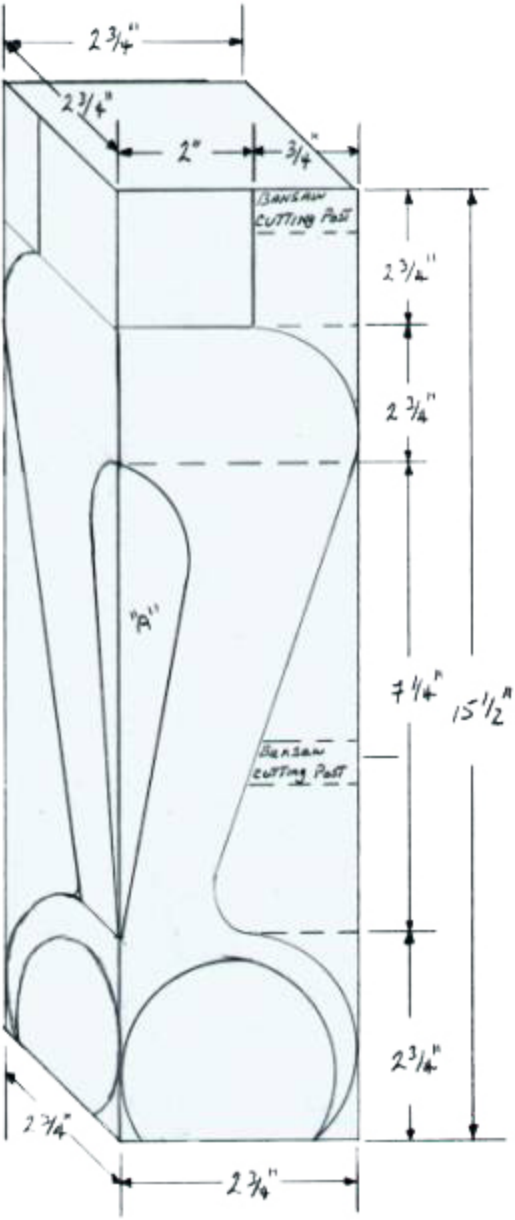

NOTE #1 When cutting the Log with a Bansaw Leave the "Bansaw Cutting Post" until you have cut both sides

NOTE #2 when making the first bansaw cut ensure you keep section "A", and tape it back on before you cut the second side.